WCIOL-6GPM-75NPT-H1151
IO-Link Water Control Block for Welding Stations

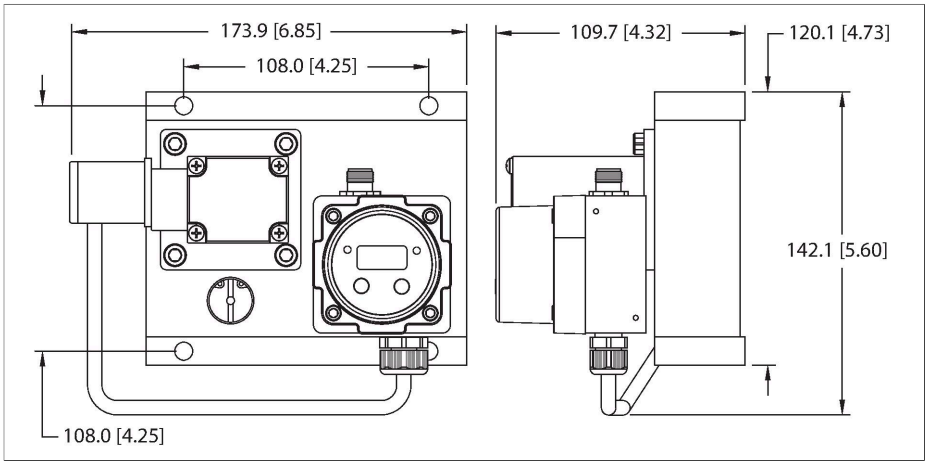

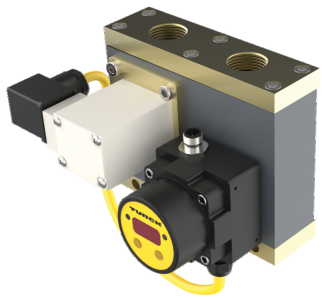

Technical data

Type	WCIOL-6GPM-75NPT-H1151
ID	100039258
Medium temperature	1…+90 °C
Pressure resistance	200 PSIG
Flow Monitoring	
Flow operating range	2.3…22 l/min
Flow monitoring accuracy	± 5 % of full scale
Flow monitoring repeatability	+/- 0.25% of Actual Flow
Electrical data	
Operating voltage	10…30 VDC
Current consumption	≤ 80 mA
Outputs	
Output 1	Flow: Relay output
Output 2	IO-Link/switching output (PNP)
Communication protocol	IO-Link
Output function	NO/NC, Relay output
IO-Link	
IO-Link specification	V 1.1
IO-Link port type	Class B
Transmission rate	COM 2/38.4 kbps
Minimum cycle time	3 ms
Programming	FDT/DTM
Mechanical data	
Material	Brass, stainless steel, PVDF, Buna-N

Features

- Joint installation creates a drop-in water-saving system.
- Simplified setup identifies peak drop and insufficient flow to the welding equipment.
- Standalone application: No PLC or robot logic circuit required.
- Flow range 0.6 to 6.0 gpm
- Solid-state SPDT relay for alarm output
- M12 male connector, 5-pin, for communication
- Four ¾" NPT ports for the process connection
- IP67

Wiring diagram

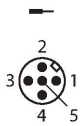

1 = 24 VDC (V1)
2 = 24 VDC (V2)
3 = GND (V1)
4 = C/Q (IO-Link)
5 = GND (V2)

Functional principle

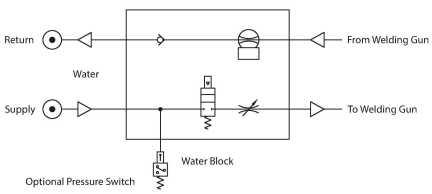

WCIOL-6GPM-75NPT-H1151| 06/29/2022 19-11 | technical changes reserved

Technical data

Process connection	3/4" NPT
Electrical connection	Connector, M12 × 1
Protection class	IP67

WCIOL-6GPM-75NPT-H1151| 06/29/2022 19-11 | technical changes reserved